TECHNICAL DATA :

1. INPUT VOLTAGE : AC 230V
2. CURRENT CONSUMPTION : 1A
3. INTERFACE : CML DIGITAL VIDEO SIGNAL
4. COLOR FRONT FRAME : EX4505[S]-TX-WH001 (WHITE)
5. DISPLAY : LTM190BT03, SAMSUNG
6. NUMBER OF PIXELS : 1,440x900
7. ACTIVE AREA : 408.2mm[16"]x255.2mm[10"]
8. COLORS : 16.7M
9. BRIGHTNESS : 300cd/□
10. CONTRAST RATIO : 1,000:1
11. WEIGHT : ~~10.5~~kg
    8 Aa

12. SURFACE TREATMENT
    1) ITEM : NO.1,2
       - COLOR : GRAY
       - COLOR CODE : PANTONE COOL GRAY 1C
       - MAKER : CHOKWANG
    2) ITEM : NO. 4,22
       - S/TREATMENT : Zn PLATING

NOTE.

1. BOLT TYPE DESCRIPTION

   23-1
   └ ITEM NO.

2. NON-ASSIGNED CONNECTOR SOCKETS/PINS SHOULD BE FILLED WITH SEALING PLUG. (SEALING PLUG : 10-305045-16, GLENAIR)

NO.	TYPE	SIZE	Q'TY
25-1	ROUND HEAD BOLT	M3xL6	29
	SPRING WASHER	M3xΦ5xt0.8	29
	FLAT WASHER	M3xΦ5.8xt0.5	29
25-2	ROUND HEAD BOLT	M3xL12	12
	SPRING WASHER	M3xΦ5xt0.8	12
	FLAT WASHER	M3xΦ5.8xt0.5	12
25-3	FAN HEAD SCREW	M4xL6	6
	SPRING WASHER	M4xΦ6.8xt1.0	6
	FLAT WASHER	M4xΦ7.8xt0.8	6
25-4	FLAT WASHER	M4xL8	10
	SPRING WASHER	M4xΦ6.8xt1.0	10
	FLAT WASHER	M4xΦ7.8xt0.8	10

군번 GROUP NO.					품번 ITEM	품 명 DESCRIPTION	사 양 SPEC	도 면 번 호 DWG NO.	-	품번 및 군번	중량 . 길이 폭 x 길이	표 면 처 리 S/TREATMENT
				1	1	MAIN FRAME	A366-91, t1.2	R1C000040				PAINTING
				1	2	COVER	A366-91, t1.2	R1D000339				PAINTING
				1	3	LCD PROTECTIVE COVER	POLYCARBONATE, t2.0	R1D000341				
				1	4	LCD INVERTER BRACKET	A366-91, t1	R1C000039				Zn PLATING
				1	5	TFT LCD PANEL	LTM190BT03, SAMSUNG					
				1	6	LCD INVERTER	GH317A, ~~SAMSUNG~~ GREEN C&C TECH	Ab				
				1	7	VIDEO RX BOARD	PID-RXB, WIS	R1D000338				
				1	8	POWER CONVERTER BOARD	PID-PCB, WIS	R1D000337				
				1	9	WIRING HARNESS	PID1-WH, WIS					
				1	10	CONNECTOR (X1)	FRITS4102R16S-1PB0G1F6/GLENAIR					
				1	11	CONNECTOR (X1)	FRITS4106F16S-1SB0F6/GLENAIR					
				1	12	CONNECTOR (X2)	UTG01412P/FCI					
				1	13	CONNECTOR(X2)	UTG61412S, UTG ~~13~~ 14 AC/FCI	Ab Ac				
				2	14	STUD	D8-316-218-190 ~~RECEPTACLE SLIP N~~ ~~D3-320-101-200~~ SOUTHCO					
				2	15	SPRING	D4-EHF5-3-950QA ~~6MM OPU HEAD EMBELISHR~~ ~~D3-376-001-049~~ SOUTHCO					
				2	16	CUP WASHER	D8-376-001-049 ~~EJECTOR SPRING STAINLESS~~ ~~D4-EHF5-3-950-QA~~ SOUTHCO					
				2	17	RETAINNER	D8-326-101-200 ~~6MM RIVET PLATE RECEPT~~ ~~D3-336-400-190~~ SOUTHCO					
				2	18	RECEPTACLE	D8-336-400-121 ~~TAMPER-RESISTANT~~ ~~D3-310-020-190~~ SOUTHCO					
				1	19	NAME PLATE	AL,t=1	R1D000452	-	06		
				1	20	FIXED WIRE	WIRE	R1D000461	-	02		
				2	21	TIE-MOUNT	JOTM-2SS, JEONO ELECTRIC					
				1	22	LCD BRACKET	A366-91, t1	R1C000037				Zn PLATING
				2	23	DUST COVER	-					
				2	24	WIRE BRACKET	A366-91, t2	R1D000461	-	01		
				1	25	BOLT & WASHER LIST	ASSY					
				2	26	CONNECTOR(X3,X4)	BCP-C7FA, CANARE					
				1	27	PID1 WIRING DIAGRAM	ASS'Y	R1D000442				

X1 : PIN ASSIGNMENT
[FRITS4102R16S-1PB0G1F6]

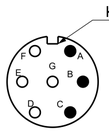

NO.	ITEM
A	TX1+(in)
B	TX1-(in)
C	TX1 SH(in)
D	
E	
F	
G	

X2 : PIN ASSIGNMENT
[UTG01412P]

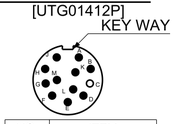

NO.	ITEM
A	POWER VCC
B	POWER GND
C	
D	ADD2
E	ADD3
F	ADD4
G	ADD5
H	ADD6
J	ADD7
K	ADD8
L	ADD9
M	ADD GND

X3 : BNC CONNECTOR

PIN NO.	REMARK
CENTER	VIDEO OUT
SHIELD	GND

X4 : BNC CONNECTOR

PIN NO.	REMARK
CENTER	VIDEO IN
SHIELD	GND

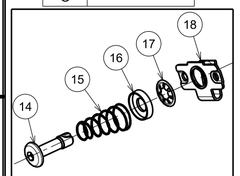

Aa Detail "B"
Scale: 1:2

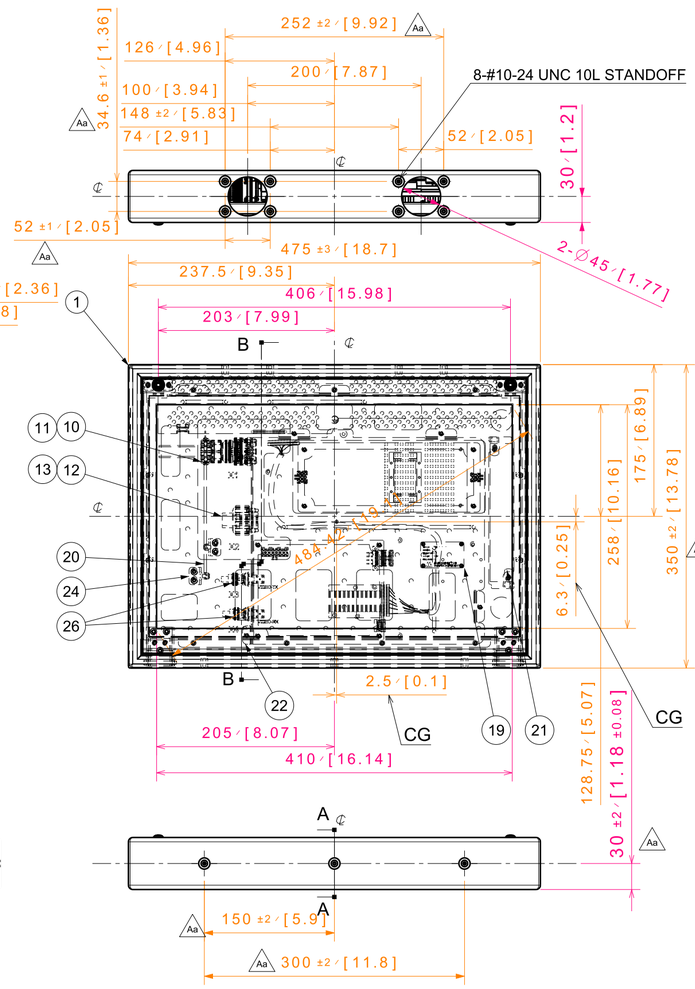

Section view B-B
Scale: 1:5

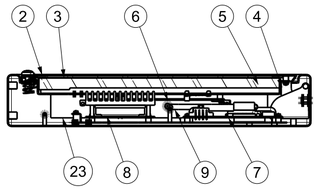

Section view A-A

COVER OPEN ANGLE(MAX.)

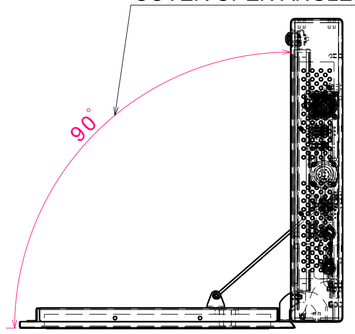

Right view
Scale: 1:5

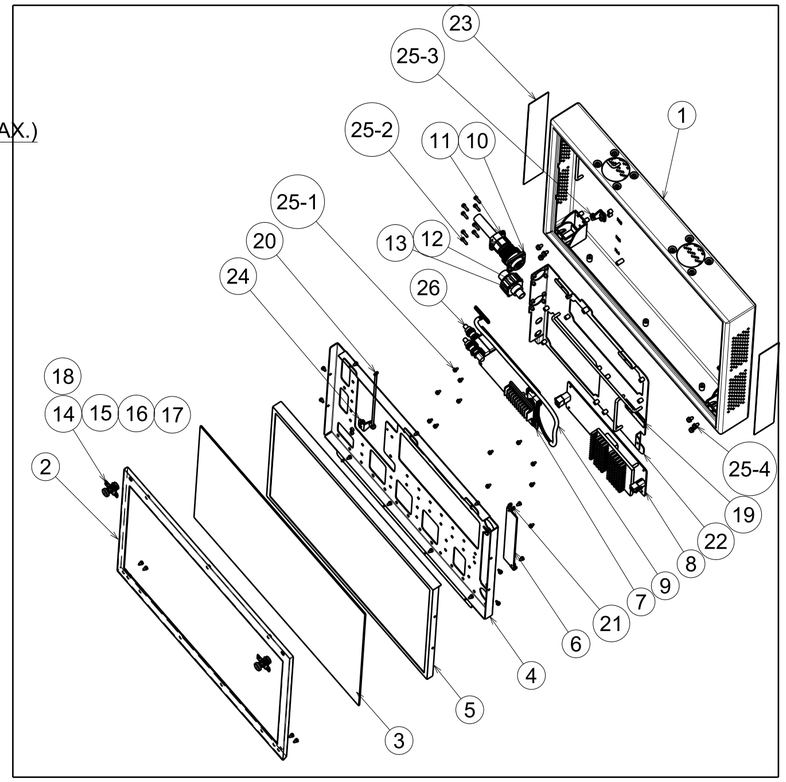

개정 CHANGE
1)Weight changed.
2)P/No.14,15 deleted.
3)Dim's & Tolerance added.
4)Detail "B" added.
2012.03.14 DGN H.Y.SHIN APP B.J.JONE Aa

P/No. 6. Maker changed.
P/No.13 connector Spec. corrected.
2012.10.23 DGN H.Y.SHIN APP B.J.JONE Ab

P/No.13 connector Spec. corrected.
2013.03.27 DGN H.Y.SHIN APP B.J.JONE Ac

GENERAL TOLERANCE (WMS-C-40201)

DIMENSION	WELDING	MACHING
0.5 ~ <6mm	±0.3	±0.1
6 ~ <30mm	±0.5	±0.2
30 ~ <120mm	±1	±0.3
120 ~ <400mm	±1.2	±0.5
400 ~ <1000mm	±2.0	±0.8
1000 ~ <2000mm	±3.0	±1.2
2000 ~ <4000mm	±4.0	±3.0
4000 ~ <6000mm	±5.0	±3.0
6000 ~ <8000mm	±7.0	±5.0
8000 ~ <12000mm	±8.0	±7.0
12000 ~ <24000mm	±10.0	±8.0

Casting	
~ <120mm	±2.0
120 ~ <315mm	±2.5
315 ~ <630mm	±3.5
630 ~ <1250mm	±5.0
1250 ~ <2500mm	±7.0
2500 ~ <5000mm	±10.0

설계MEMO

DIM. IN mm	작성일 DATE	2011.09.29	승인 APPROVED
척도 SCALE	작성 DRAWN	B.H.KANG	B.J.JONE
1 / 5	설계 DESIGNED	-	
공차 적용기준 : WMS C 40201	검토 CHECKED	J.Y.LEE	

WOOJIN Industrial System Co., Ltd.

DENVER RTD FASTRACKS

LCD PASSENGER INF. DISPLAY-1

R1D1473-25851 Ac